LACELA

Product: Die Grinder Art. No. 201004

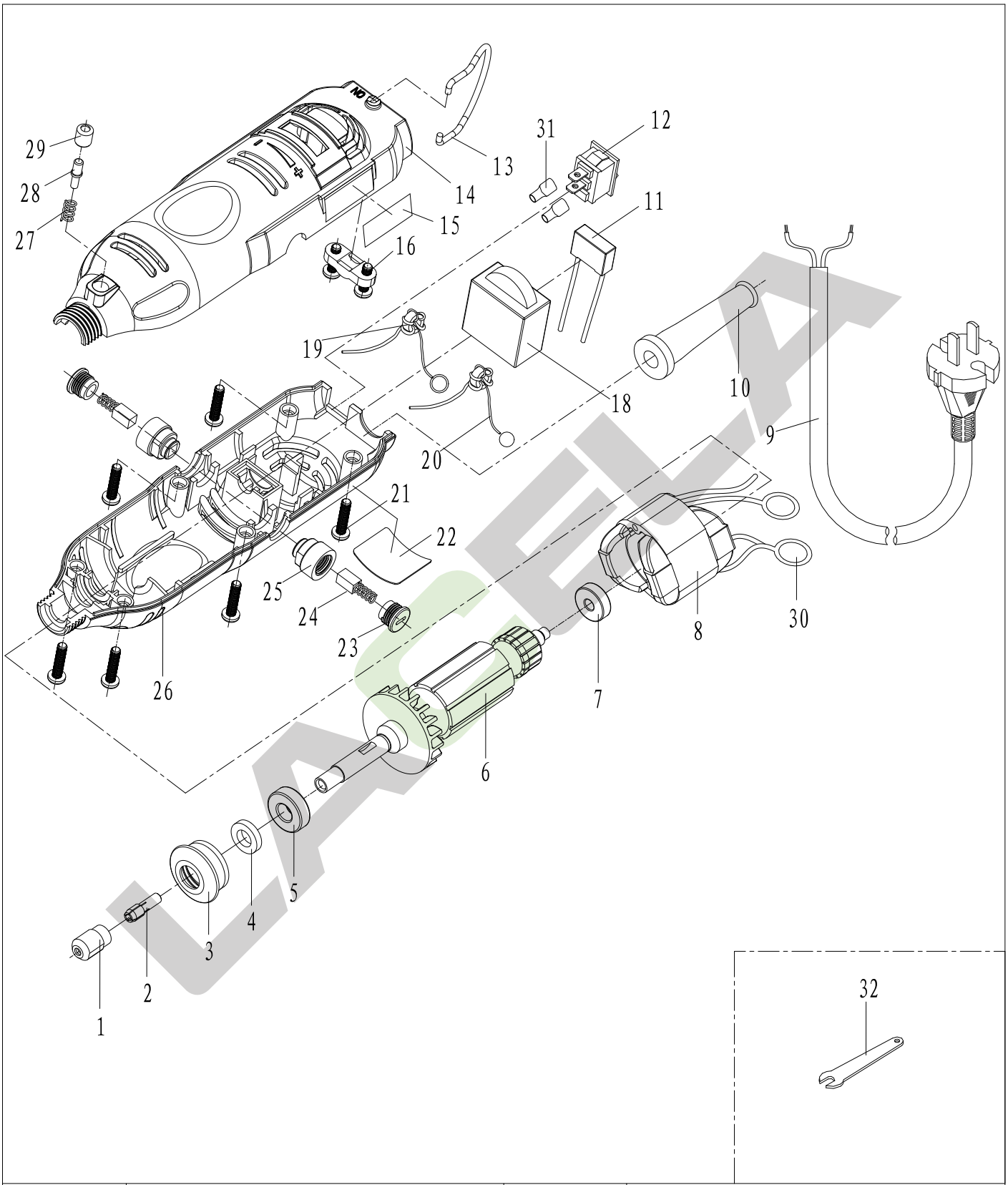

Version No.	D	Enable Time	2022.9

LACELA

Product:Die Grinder Art.No.201004

No.	Part Name(Chinese)	Part Name(English)	Code	Qty	No.	Part Name(Chinese)	Part Name(English)	Code	Qty
1	夹头螺母	Collet NUT	30501001	1					
2	弹性夹头3.2	Collet 3.2	10304001001	1					
3	塑料螺母M19×2	Plastic Screw Nut M19×2	30501002	1					
4	羊毛圈13×7×2	Wool Ring 13×7×2	10509001018	1					
5	轴承698-2Z	Bearing 698-2Z	30104069	1					
6	转子	Armature	10502001342	1					
7	轴承625-2Z	Bearing 625-2Z	30104045	1					
8	定子	Stator	10501001003	1					
9	电源线2×0.75	Cord 2×0.75	10602006130	1					
10	电缆护套	Cord Sleeve	10102001043	1					
11	电容	Capacitor	10603001026	1					
12	开关	Switch	10601001204	1					
13	吊环	Rings	10401008001	1					
14	左机壳	Left Housing	10101002014	1					
15	商标	Trademark	20402007131	1					
16	电缆压板	Cord Anchor	10101011123	1					
18	调速器	Speed Controller	10601002035	1					
19	电感	Inductance	10604001059	1					
20	电感	Inductance	10604001058	1					
21	自攻螺钉ST4×16	Screw ST4×16	30202111	6					
22	铭牌	Nameplate	20302007477	1					
23	刷握盖	Brush Cap	10606001002	2					
24	碳刷	Carbon Brush	10605001001	2					
25	刷握	Brush Holder	10606001001	2					
26	右机壳	Right Housing	10101002013	1					
27	自锁弹簧	Since The Spring Lock	10303001001	1					
28	自锁销	Self-lock Pin	10306001001	1					
29	自锁帽	Since The Cap Lock	10101007001	1					
30	拉簧	Spring Ring	10607001002	2					
31	保护套4.8	Protection Sleeve 4.8	30802012	2					
32	扳手9.5	Wrench 9.5	21201002001	1					
Version No.		D			Enable Time		2022.9		

LACELA